Precision Test Adapters

1.0 mm(F) to 2.4 mm(F)

withwave

Versatile RF & MW Test Solutions

Withwave's Precision Test Adapters are designed based on precision microwave interconnection technologies. ***This 1.0 mm(F) to 2.4 mm(F)*** adapter is manufactured to precise microwave specifications and constructed with female gender on both sides. The precision microwave connector interfaces ensure an excellent microwave performance up to 50 GHz

Features

- Frequency range : DC to 50 GHz
- VSWR : 1.3 : 1(Max) @ 50 GHz
- Stainless steel (passivated)

Specification

Scope	Specification	AD00F02FS1
Electrical	Impedance(Ohm)	50
	Operation Freq.(GHz)	DC to 50 GHz
	VSWR (Max)	1.3 : 1 @ 50 GHz
Material	Dielectric	Special dielectric
	Center Contact	Beryllium copper with gold plated
	Body	Passivated Stainless Steel

** RoHS Compliant*

Drawing

Part No.: AD00F02FS1

Unit : mm

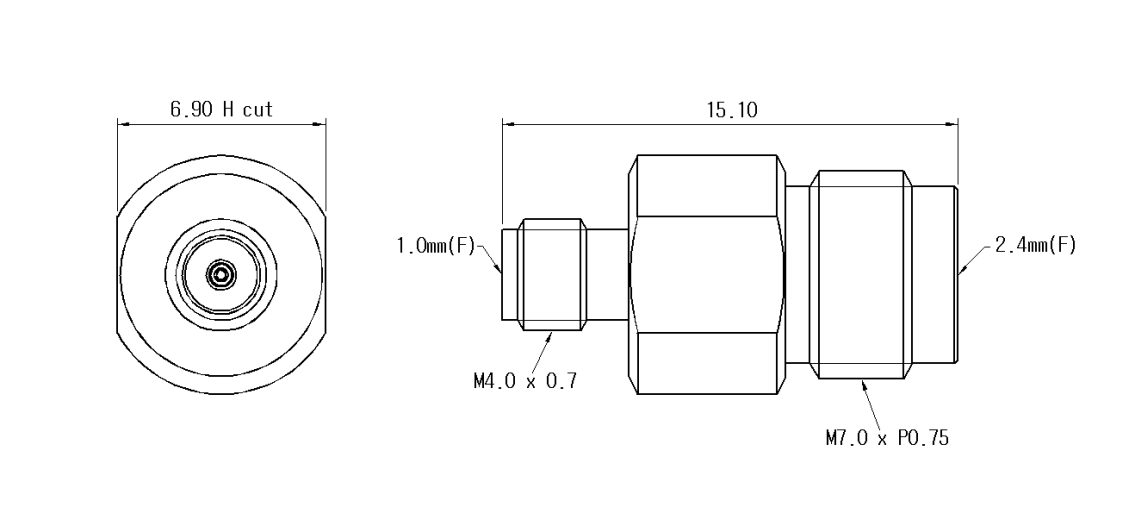

Test Result
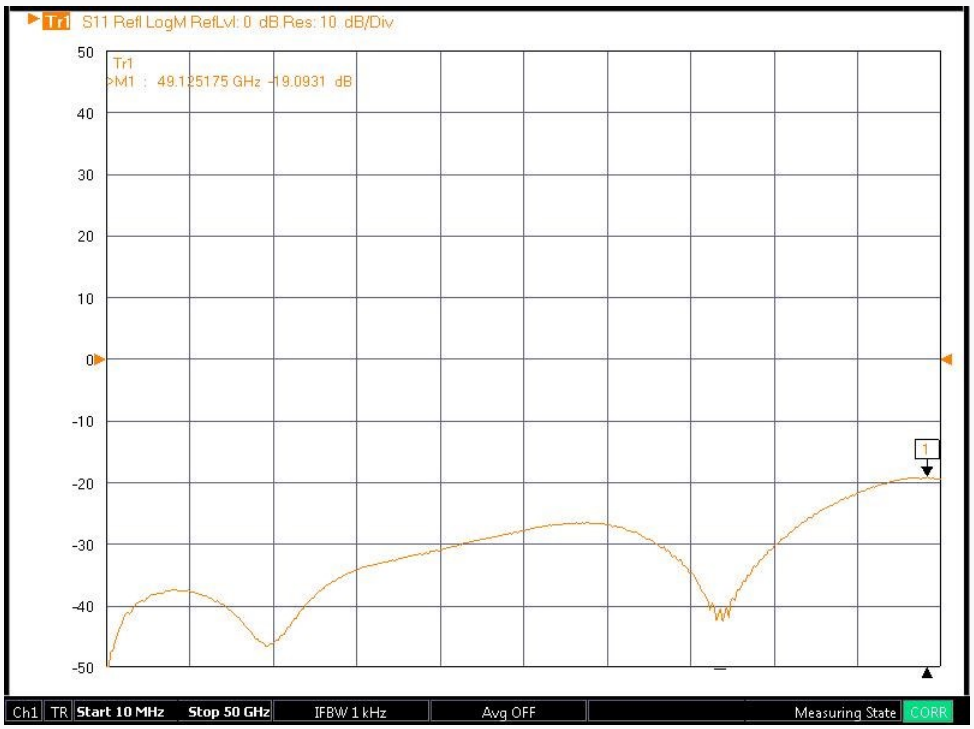
- **Frequency : 10 MHz to 50 GHz**